mareco LUCE
47032 bertinoro (FC) Italia
via s.croce, 121 (z.i.)
tel. +39 0543 4687
fax +39 0543 449051
info@marecoluce.it
www.marecoluce.it

This document is exclusive MARECO LUCE s.r.l., is strictly prohibited disclosure or reproduction, even partial, as well the use of without written consent of MARECO LUCE s.r.l..The company reserves the right to change models, dimensions and materials at any time without notice.

PRODUCT DATA SHEET

Oracolo street optics Medium

Code : 1060984S

PRODUCT FAMILY
- Urban architectural LED with cut-off optics (IP66) for pole top use on Ø60mm poles

MATERIAL CHARACTERISTICS
- Body made of die-cast aluminum (ADC12) anodized and painted
- Pole top made of die-cast aluminum (ADC12) anodized and painted
- Special outdoor polyester powder coating to ensure high protection against weathering, guaranteed for 10 years
- Gear tray in reinforced thermoplastic
- Silicone gasket
- Screws in stainless steel A2

COLOUR
- Anthracite RAL 7016 textured

LIGHTING CHARACTERISTICS
- LED's lighting source in fixed position
- Monochromatic LED module (12 Led's)
- Street medium LED optics in PMMA (acrylic) with high performances
- Non yellowing, transparent PMMA (acrylic) lens
- Immediately ON at 100% of the light flux
- CUT-OFF light fitting conforming to all regional/local laws against light pollution

WIRING CHARACTERISTICS
- Wiring and optical compartments connected via IP68 waterproof polarized male-female quick connection.
- Dimmable driver 1-10V (standard configuration), or virtual midnight (Class I)
(DALI dimmable version available on request)
- Dimmable driver 0-10V (standard configuration), or PWM (Class II)
(DALI dimmable version available on request)
- Over voltage protection; Common Mode 10kV, Differential Mode 6kV
- LED's compartment equipped with osmotic valve for leakage of air and humidity.

INSTALLATION AND ORDINARY MAINTENANCE CHARACTERISTICS
- Luminaire for direct installation on Ø60mm poles
- Connection to the main supply through a H07RN-F 3x1,5mmq pre-wired cable out of the luminaire (80cm) - (Class I)
- Connection to the main supply through a H07RN-F 2x1,5mmq pre-wired cable out of the luminaire (80cm) - (Class II)
- Ordinary maintenance (not necessary)
- Extraordinary maintenance possible by accessing to the wiring compartment by loosening the screws of the wiring-plate and unhooking the IP68 waterproof polarized male-female quick connection.

DIMENSIONS
- 482x215x342mm

TECHNICAL SPECS
• Step MacAdam: 3
• Lifetime: L85/B50>60Kh - Tc 70-105°C
L90/B50>50Kh - Tc 70°C
• Lifetime Driver: 100Kh (Class I)
• Lifetime Driver: 120Kh (Class II)
• Over voltage protection: CM10kV, DM6kV
• Nominal voltage: 202-254V (Class I)
• Nominal voltage: 200-240V (Class II)
• Warranty: 5 years

TECHNICAL SPECS 3000K
• LED's output: 7103lm@tc25°C
• Luminaire output: 6343lm@ta25°C
• LED's efficiency: 140lm/W
• Luminaire efficiency: 107,9lm/W
• LED's consumption: 50,7W
• Luminaire consumption: 58,8W
• Power Factor: 0,95

TECHNICAL SPECS 4000K
• LED's output: 7406lm@tc25°C
• Luminaire output: 6614lm@ta25°C
• LED's efficiency: 146lm/W
• Luminaire efficiency: 112,5lm/W
• LED's consumption: 50,7W
• Luminaire consumption: 58,8W
• Power Factor: 0,95

Rev. 4 - 01/03/2022

Details
• Conformity with EU Directives
• Conforms to all regional/local laws against light pollution
• CLASS I
• Double insulation/class II
• IK06
• RG1
• CRI>80
• Dimmable
• VIRTUAL MIDNIGHT
• IP 65

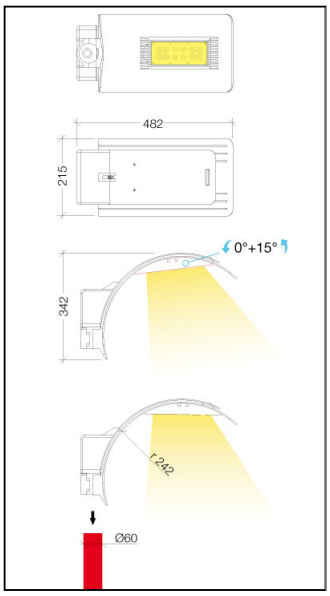

202-254V 50/60Hz 56,8W
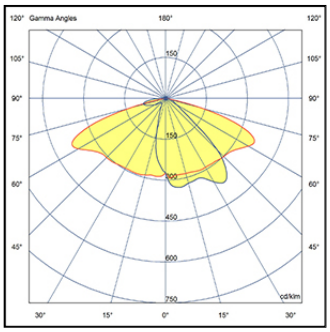
CE | CUT OFF | IK 06 | RG 1 | CRI ≥80 | IP65