mareco LUCE
47032 bertinoro (FC) Italia
via s.croce, 121 (z.i.)
tel. +39 0543 4687
fax +39 0543 449051
info@marecoluce.it
www.marecoluce.it

This document is exclusive MARECO LUCE s.r.l., is strictly prohibited disclosure or reproduction, even partial, as well the use of without written consent of MARECO LUCE s.r.l..The company reserves the right to change models, dimensions and materials at any time without notice.

PRODUCT DATA SHEET
Discovery pastoral bracket Pedestrian optics
Code : 2123084S

PRODUCT FAMILY
- Urban architectural LED with cut-off optics (IP66) for mounting on side pastoral bracket Ø60mm or Ø76mm

MATERIAL CHARACTERISTICS
- Body made of die-cast aluminum (ADC12) anodized and painted
- Pastoral bracket made of die-cast aluminum (ADC12) anodized and painted
- Special outdoor polyester powder coating to ensure high protection against weathering, guaranteed for 10 years
- Diffuser in flat, transparent tempered glass (4mm thick)
- Galvanised steel gear tray
- Silicone gasket
- A2 Stainless steel screws

COLOUR
- Anthracite RAL 7016 textured

WEIGHT
- Luminaire 7,5Kg
- Packaging 9Kg (590x650x165mm)

LIGHTING CHARACTERISTICS
- LED's lighting source in fixed position
- Monochromatic LED module (72 Led's)
- Pedestrian LED optics in PMMA (acrylic) with high performances
- Non yellowing, transparent PMMA (acrylic) lens
- Immediately ON at 100% of the light flux (soft start at 0,5 sec)
- CUT-OFF light fitting conforming to all regional/local laws against light pollution

WIRING CHARACTERISTICS
- Tool-free simplified maintenance to access the optics
- Built-in dimmable driver 0-10V, PWM or virtual midnight
(DALI dimmable version available on request)
- Over voltage protection; Common Mode 10kV, Differential Mode 6kV
- Equipped with osmotic valves for leakage of air and humidity. One valve for the watertight optics and another for the wiring compartment

INSTALLATION AND ORDINARY MAINTENANCE CHARACTERISTICS
- Luminaire for direct installation on side brackets Ø60-76mm
- Adjustable inclination with tilt regulation ±90° (with steps of 5°)
- Luminaire including a H05RN-F 1,5m long pre-wired neoprene cable (3x1mm²) Class I
- Luminaire including a H05RN-F 1,5m long pre-wired neoprene cable (2x1mm²) Class II
- M16x1,5mm cable gland suitable for cable Ø6,5-10mm
- Ordinary maintenance (not necessary)
- Fast tool-free extra maintenance and possibility to replace the optic group and/or the wiring
- Opening of wiring compartment via 2 clips. Fall-prevention blocking system of the top cover
- Cut out system when opening the light fitting through disconnecting switch
- Suitable for installation up to 8m height max

DIMENSIONS
- Round light fitting Ø516mm. Total height 327mm

GENERAL SPECIFICATIONS
• Step MacAdam: 3
• Lifetime: L70/B50>60Kh - Tc 115°C
• Lifetime Driver: 120Kh
• Over voltage protection: CM10kV, DM6kV
• Warranty: 5 years

TECHNICAL SPECS 3000K - 35W
• LED's output: 5940lm@tc25°C
• Luminaire output: 4493lm@ta25°C
• LED's efficiency: 187,5lm/W
• Luminaire efficiency: 131,3lm/W
• LED's consumption: 31,7W
• Luminaire consumption: 35W
• Power factor: >0,97

TECHNICAL SPECS 4000K - 35W
• LED's output: 6059lm@tc25°C
• Luminaire output: 4849lm@ta25°C
• LED's efficiency: 191,3lm/W
• Luminaire efficiency: 141,7lm/W
• LED's consumption: 31,7W
• Luminaire consumption: 35W
• Power factor: >0,97

TECHNICAL SPECS 3000K- 55,4W
• LED's output: 8730lm@tc25°C
• Luminaire output: 6550lm@ta25°C
• LED's efficiency: 175,7lm/W
• Luminaire efficiency: 121,8lm/W
• LED's consumption: 49,7W
• Luminaire consumption: 55,4W
• Power Factor: >0,93

TECHNICAL SPECS 4000K - 55,4W
• LED's output: 8906lm@tc25°C
• Luminaire output: 7042lm@ta25°C
• LED's efficiency: 179,3lm/W
• Luminaire efficiency: 131lm/W
• LED's consumption: 49,7W
• Luminaire consumption: 55,4W
• Power Factor: >0,93

Rev. 6 - 30/09/21

Details
• Conforms to all regional/local laws against light pollution
• CLASS I
• Double insulation/class II
• IK08
• RG1
• CRI>70
• Dimmable
• VIRTUAL MIDNIGHT
• IP 66

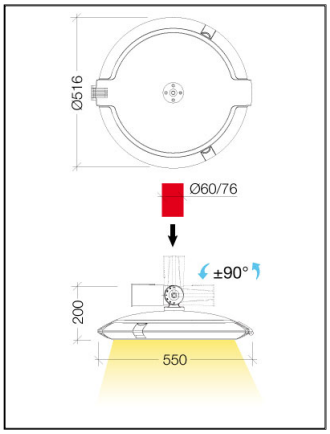

220-240V 50/60Hz 35W
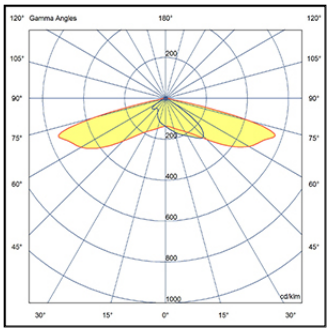
CUT OFF			IK 08	RG 1	CRI ≥70			IP66