mareco LUCE
47032 bertinoro (FC) Italia
via s.croce, 121 (z.i.)
tel. +39 0543 4687
fax +39 0543 449051
info@marecoluce.it
www.marecoluce.it

This document is exclusive MARECO LUCE s.r.l., is strictly prohibited disclosure or reproduction, even partial, as well the use of without written consent of MARECO LUCE s.r.l..The company reserves the right to change models, dimensions and materials at any time without notice.

PRODUCT DATA SHEET
CD Led
Code : 1068284S

PRODUCT FAMILY
- Urban architectural LED luminaire, suitable for uplight installation on poles Ø60mm on top (IP65)

MATERIAL CHARACTERISTICS
- Housing in die-cast aluminium (ADC12) anodized and painted
- Polyester powder coating with a pretreatment (Phosphochromating method) to ensure high protection against weathering
- Flat, brushed, tempered glass diffuser 5mm thick
- V-shaped base for pole connection in NY-FV30%
- Silicone gaskets
- A2 stainless steel screws

COLOR
- Anthracite RAL 7016 textured

LIGHTING CHARACTERISTICS
- LED lighting source in a fixed position
- Immediately ON at 100% of the light flux (soft start at 0, 5 sec.)
- Monochromatic LED module
- Round symmetrical light throw
- CUT-OFF luminaire conforming to all regional/local laws against the light pollution

WIRING CHARACTERISTICS
- LED's module built-in driver
- 440mA driver output (30,5W)
- 690mA driver output (49,7W)
- 120 LED's beam 120°
- Built-in dimmable driver 0-10V, PWM or virtual midnight (DALI dimmable version available on request)
- Over voltage protection; Common Mode 10kV, Differential Mode 6kV
- Pre-wired with H07RN-F 2x1mmq cable (200mm) for the connection to the mains
- Equipped with osmotic valve for leakage of air and humidity

INSTALLATION AND MAINTENANCE CHARACTERISTICS
- Luminaire for direct installation on Ø60 mm poles
- Cable gland equipped with osmotic valve for air and humidity leakage (reducing the overpressures)
- Fixing to pole using n°3 dowel
- Ordinary and extraordinary maintenance not necessary

DIMENSIONS
- Ø400x125mm

TECHNICAL SPECS
• Step MacAdam: 3
• Lifetime LED's: L70/B50=56Kh/85°C
• Lifetime driver: 120Kh
• Over voltage protection: CM10KV, DM6KV
• Warranty: 3 years

TECHNICAL SPECS 4000K - 33,6W
• LED's output: 5254lm@tc25°C
• Luminaire output: 2064lm@ta25°C
• LED's circuit board consumption: 30,5W
• Luminaire consumption: 33,6W

TECHNICAL SPECS 3000K - 33,6W
• LED's output: 5109lm@tc25°C
• Luminaire output: 2007lm@ta25°C
• LED's circuit board consumption: 30,5W
• Luminaire consumption: 33,6W

TECHNICAL SPECS 4000K - 57,2W
• LED's output: 7751lm@tc25°C
• Luminaire output: 3045lm@ta25°C
• LED's circuit board consumption: 49,7W
• Luminaire consumption: 57,2W

TECHNICAL SPECS 3000K - 57,2W
• LED's output: 7536lm@tc25°C
• Luminaire output: 2960lm@ta25°C
• LED's circuit board consumption: 49,7W
• Luminaire consumption: 57,2W

Rev. 5 - 01/03/2022

Details
• Conformity with EU Directives
• Conforms to all regional/local laws against light pollution
• Double insulation/class II
• IK08
• RG1
• CRI>80
• Dimmable
• VIRTUAL MIDNIGHT
• IP 65

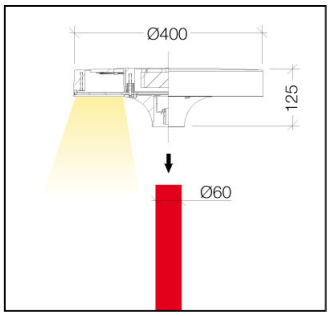

220-240V 50/60Hz 57,2W

CE | CUT OFF | IK 08 | RG 1 | CRI ≥80 | IP65

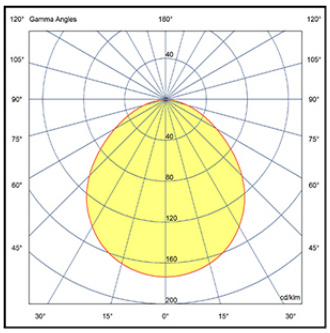
120° Gamma Angles
180°
120°
105°
105°
90°
90°
75°
75°
60°
60°
45°
45°
40
40
80
120
160
200
cd/klm
30°
15°
0°
15°
30°